ACE LED
ULTRA VALUE LIGHTING
By Linmore LED

PROJECT NAME		DATE	
CAT. NUMBER			
NOTES			

SPEC SHEET

Ace LED Troffer (AT2)

RECESSED LED TROFFER

5 YEAR PRODUCT WARRANTY

Sensor sold separately

DLC LISTED PREMIUM · TRUSTED NLB WARRANTY · Ready · c UL us LISTED · DAMP · 0-10V

Projected L70 up to 150,000 hours

Selectable Wattage

Each troffer has a switch with three output power options, allowing to select the desired lumen output and energy consumption for each application.

Selectable Color Temperature

Simply use the switch directly on the fixture to select the desired color temperature for your space: 3500K, 4000K, or 5000K.

EZ-Connect™ Receptacle

The simplest and fastest way to add sensors and UltraLink wireless controls at any time in the field. Snap-in system, no tools or wiring needed.

KEY FEATURES

- 2,500 to 6,250 Lumens
- Up to 125 LPW
- 1x4, 2x2 and 2x4 Sizes Available
- Ultra Slim Design
- Recessed and Surface Mounting Options
- Frosted Lens
- Low Glare
- Emergency Battery Backup Available

FEATURES & SPECIFICATIONS

CONSTRUCTION

- **Housing:** Galvanized sheet. Ultra slim design.
- **Housing Color:** White.
- **EZ-Connect™ Receptacle:** The simplest and fastest way to add sensors and wireless controls at any time on the field. Snap-in system, no tools or wiring needed.

ELECTRICAL

- **Power Input:** 120-277V (50/60Hz).
- **Power Factor:** Greater than 0.9.
- **Total Harmonic Distortion:** Less than 20%.
- **Emergency Battery Backup:** EMB has 9 watts output, producing ~1,100 lumens for 90 minutes. Sold as an accessory (field installed).

OPERATION

- **Environment:** For interior applications, dust-resistant, listed for damp locations.
- **Ambient Range Operation:** -20°C up to 35°C (-4°F up to 95°F).

OPTICS

- **CCT:** 3500K, 4000K, 5000K (selectable via switches).
- **CRI:** 80+ standard.
- **Lens:** Polycarbonate, Frosted. 120° beam angle.

MOUNTING

- **Recessed:** In T-bar grid ceiling with integral earthquake clips for secure attachment enclosure.
- **Surface Mount:** Surface mount kit available as an accessory.

CONTROLS[1]

- **Dimming:** 0-10V standard. Dim to Off. Dimming range 100% to 5%.
- **Occupancy Sensors:** PIR sensor, On/Off/Dim. EZ-Connect™ Snap-in system for field installation.
- **Networked Lighting Controls:** UltraLink Wireless Controls with Bluetooth® NLC Mesh technology. EZ-Connect™ Snap-in system for field installation.

EZ-Connect™ Receptacle with occupancy sensor installed

Back View

WARRANTY

- **5 Year Warranty:** The fixture is guaranteed for 5 years free of defects in materials and workmanship, including LEDs and driver. "Defective" is considered if ten percent (10%) or more of the LEDs, per product, are non-operating LEDs, or color temperature has shifted more than 500° Kelvin within the warranty period. See terms and conditions at https://linmoreled.com/warranty

LISTINGS & CERTIFICATIONS

- UL listed.
- RoHS compliant.
- IC rated for insulated ceilings.
- UL listed for damp locations.
- DesignLights™ Consortium Premium.

© 2026 Linmore LED Labs, Inc.

TECHNICAL SPECS

SIZE	WATTS	LUMEN OUTPUT	EFFICACY	PART NUMBER
1x4	20 / 30 / 40	2,500 / 3,750 / 5,000	125	AT20S-A2-ADJ-14-ADJ-80-FR-LV-GRID-EZ40-10V
2x2	20 / 30 / 40	2,500 / 3,750 / 5,000	125	AT20S-A2-ADJ-22-ADJ-80-FR-LV-GRID-EZ40-10V
2x4	30 / 40 / 50	3,750 / 5,000 / 6,250	125	AT20S-A2-ADJ-24-ADJ-80-FR-LV-GRID-EZ40-10V

Typical lumen output (±10%) at 5000K CCT and 277V (LV) under 25°C ambient temperature.

Selectable Wattage and Color Temperature

Fixtures ship from the factory with the highest wattage and 4000K CCT, to change these settings:

1. Make sure the fixture is off.
2. Use dip switches at the back of the fixture to select output power and color temperature.

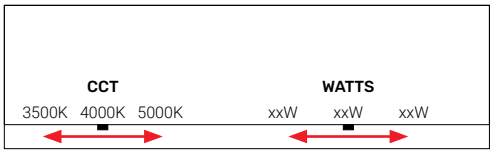

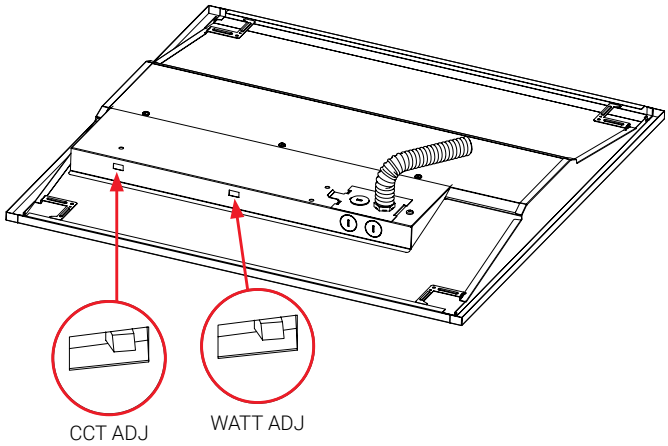

ORDERING

SERIES MODEL - COMPLIANCE - WATTS - SIZE	COLOR TEMP	CRI	LENS	VOLTAGE
AT20S-A2-ADJ-14 **AT20S-A2-ADJ-22** **AT20S-A2-ADJ-24**	**ADJ** Adjustable/Selectable: 3500K, 4000K, 5000K	**80** 80+ CRI	**FR** Frosted lens	**LV** 120-277V

MOUNTING	CONTROLS[1]	DIMMING
GRID Standard mounting for grid ceilings Safety Cable mounting optional, see Accessories	**EZ40** EZ-Connect™ Receptacle with Snap-in system (standard) Sensors not included, see Controls pages for available products	**10V** 0-10V

Ordering Example: AT20S-A2-ADJ-22-ADJ-80-FR-LV-GRID-EZ40-10V

© 2026 Linmore LED Labs, Inc.

ACCESSORIES

Must be ordered separately. Packaged separately.

FIXTURE ACCESSORIES

Part Number	Type	Description
CABLEKIT-LOOP10P	Cable Kit	Gripple Cable Kit. Includes (two) 10 ft. aircraft cables with adjustable end loop. Pack of 10 cables.
CABLEKIT-LOOP10P-SS	Cable Kit	Gripple Cable Kit. Includes (two) 10 ft. aircraft cables with adjustable end loop. Stainless Steel. Pack of 10 cables.
AT2-DWK14	Drywall Kit	Drywall Kit for 1x4 Ace LED Troffer, Flush Mount.
AT2-DWK22	Drywall Kit	Drywall Kit for 2x2 Ace LED Troffer, Flush Mount.
AT2-DWK24	Drywall Kit	Drywall Kit for 2x4 Ace LED Troffer, Flush Mount.
AT2-SMK14	Surface Mount Kit	Surface Mounting Kit for 1x4 Ace LED Troffer.
AT2-SMK22	Surface Mount Kit	Surface Mounting Kit for 2x2 Ace LED Troffer.
AT2-SMK24	Surface Mount Kit	Surface Mounting Kit for 2x4 Ace LED Troffer.
AT2-EMB-09W	Battery Backup Driver	Emergency Backup Driver with Battery, 9W, ~1,100 lumens for 90 minutes. Field installed. Ships in a separate box.

© 2026 Linmore LED Labs, Inc.

BASIC CONTROLS

Controls are field installed, must be ordered as a new line item and will ship in a separate box.

BASIC SENSORS[1]

	Part Number	Description
	PIR-WH-EZ40	PIR Occupancy and Daylight Sensor, EZ-Connect Snap-in System, Plug & Play, On/Off/Dim, 12' Max Mounting Height, IP20. Field installed. Sensor can be re-programmed with remote SEN-PROG (sold separately).
	SEN-PROG	Infrared Remote Programmer for Occupancy Sensors. Required to change default settings and modes of operation.

DEFAULT SETTINGS

Sensitivity=100%, Hold time=5min, Daylight sensor=disabled, Stand-by dim level=30%, Stand-by time=60min.

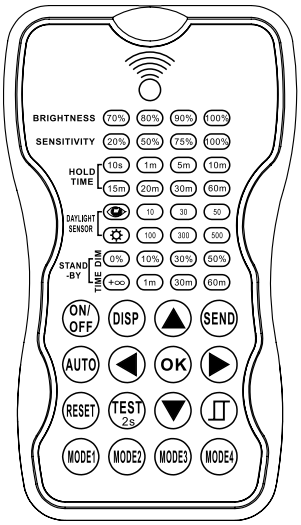

INFRARED REMOTE PROGRAMMER

Required to change default settings and modes of operation.

Brightness	Light output during occupancy (70%, 80%, 90%, 100%).		**Daylight harvesting function.** Selects the current surrounding lux value as the daylight threshold.
Sensitivity	Detection area of the sensor (20%, 50%, 75%, 100%).		**Daylight sensor disabled.** All motion detected turns on the light, no matter how bright the natural light is.
Hold Time	Time the sensor waits to turn off or dim the light after the area is vacated.	**Stand-by Dim**	Light output during vacancy (0%, 10%, 30%, 50%).
Daylight Sensor	Daylight sensor status and daylight threshold values in lux.	**Stand-by Time**	Time the sensor keeps the light at stand-by dim level after the hold time has elapsed.

Scene Modes

The remote comes with four preprogrammed modes. These can be used as is, or adjusted with different parameters and saved over an existing mode.

Scene	Application	Brightness	Sensitivity	Hold Time	Stand-by Dim	Stand-by Time	Daylight Sensor
MODE 1	Indoor	100%	75%	5min	30%	30min	Disabled
MODE 2	Indoor	100%	75%	1min	30%	+∞	Disabled
MODE 3	Indoor	100%	75%	5min	30%	30min	30lux
MODE 4	Outdoor	100%	75%	1min	30%	+∞	30lux/300lux

© 2026 Linmore LED Labs, Inc.

ULTRALINK BLUETOOTH CONTROLS

Controls are field installed, must be ordered as a new line item and will ship in a separate box.

ULTRALINK CONTROLLERS / SENSORS[1]

	Part Number	Description
	ULTRAPIR-WH-EZ40	UltraLink Bluetooth NLC Wireless Fixture Controller with PIR Occupancy and Daylight Sensor, White Color, EZ-Connect Snap-in System, 12' Max Mounting Height, IP20, Silvair Firmware. Field installed.
	SEN-PROG	Infrared Remote Programmer for Occupancy Sensors. Only required for EZ10 UltraLink sensors to change detection sensitivity.

ULTRALINK ACCESSORIES

	Part Number	Description
	ULTRAGATEWAY	UltraLink Bluetooth NLC Wireless Gateway, required for Advanced Features and Time-Based Events. One gateway can control up to 200 fixtures, allowing for energy monitoring, people tracking, and scheduling. Interior installation only.
	ULTRAGATEWAY-4G	UltraLink Bluetooth NLC Wireless Gateway, RJ45 Ethernet Connector and SIM Card Slot for 4G Cellular Connectivity, PoE or 120V AC Power Adapter, Long Range Bluetooth Mesh, Hardware Security Module, Encrypted File System, Secure Boot, Interior installation only.
	ULTRAGATEWAY-EXT	UltraLink Bluetooth NLC Wireless Exterior Rated Gateway Box with Long Range Antenna, includes ULTRAGATEWAY. 120-277V Power Supply required.
	ULTRAGATEWAY-EXT-4G	UltraLink Bluetooth NLC Wireless Exterior Rated Gateway Box with Long Range Antenna and 4G Cellular Connectivity. Includes ULTRAGATEWAY-4G in a Vented, Temperature-Controlled NEMA Enclosure, Universal Voltage (120, 208, 240, 277, and 480V), Wall Mount, 24 Hour Battery Backup. Optional pole mount kit. Cellular data plans available.
	ULTRATIME-BAT	UltraLink Bluetooth NLC Time-Keeping Battery Backup includes an Outdoor Rated Enclosure, a Long Range Antenna and a Backup Battery. For use to keep time during a power outage and for in-node scheduling.
	ULTRADASH	UltraLink Dashboards for Energy, Occupancy Heat Mapping, and Energy Heat Mapping. Gateway (ULTRAGATEWAY) required, sold separately.

Bluetooth® NLC

Technology Partner SILVAIR

© 2026 Linmore LED Labs, Inc.

DIMENSIONS & DRAWINGS

1x4

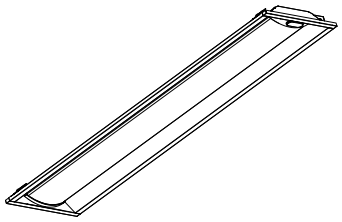

2x2

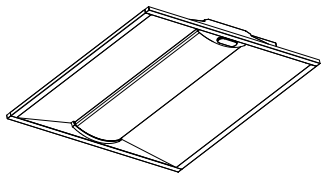

2x4

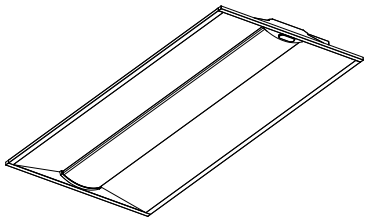

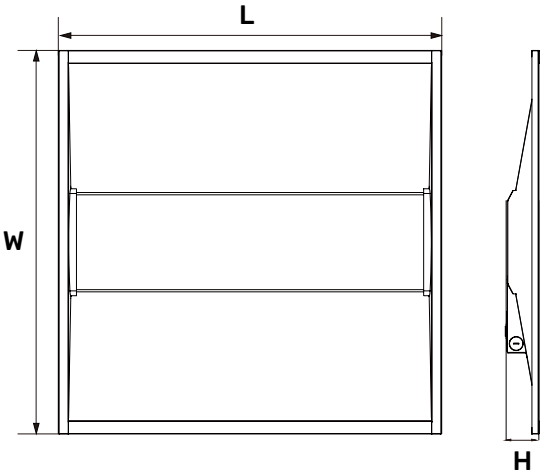

Size	L	W	H	Weight
1x4	47.76”	11.93”	1.97”	~6.3 lbs
2x2	23.74”	23.74”	1.97”	~5.3 lbs
2x4	47.76”	23.74”	1.97”	~8.8 lbs

Dimension tolerances: ± 0.1”. Weights are approximate, if weight is a concern, please contact factory.

Drywall Kit

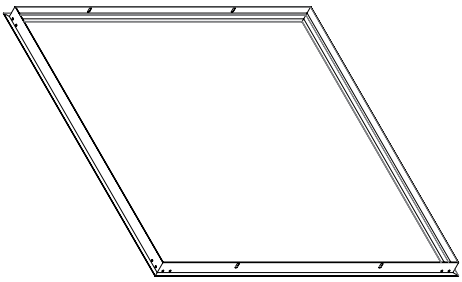

Size	L	W	H	Weight
1x4	48.94”	12.91”	0.98”	~ 1.2 lbs
2x2	24.92”	24.92”	0.98”	~ 1.0 lbs
2x4	48.94”	24.92”	0.98”	~ 1.4 lbs

Surface Mount Kit

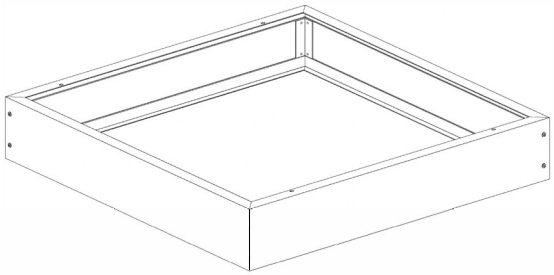

Size	L	W	H	Weight
1x4	48.07”	12.28”	4.13”	~ 3.1 lbs
2x2	24.06”	24.06”	4.13”	~ 2.6 lbs
2x4	48.07”	24.06”	4.13”	~ 3.7 lbs

© 2026 Linmore LED Labs, Inc.

PACKAGING

Model	Units/Box	Boxes/Pallet	Units/Pallet
1x4	2	46	92
2x2	2	48	96
2x4	2	24	48

PHOTOMETRY

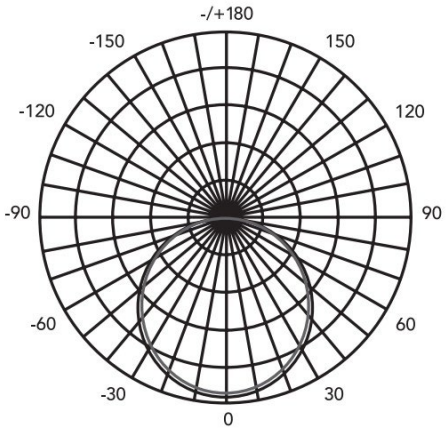

AVERAGE BEAM ANGLE (50%) : 114.3 DEG

LAMBERTIAN

SENSOR COVERAGE

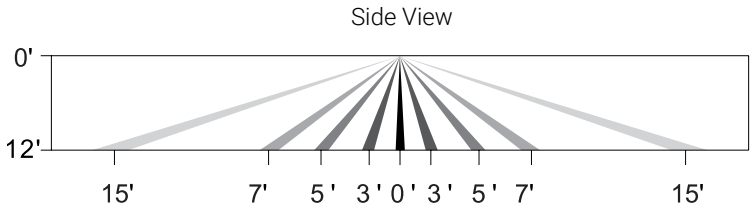

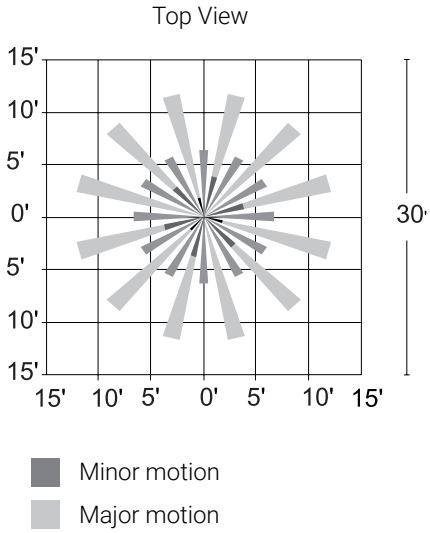

FOOTNOTES

1. The performance of sensors and lenses is influenced by various factors beyond Linmore LED's control, including but not limited to environmental conditions, user settings, and proper maintenance. While we provide detailed specifications and guidelines to help optimize performance, we cannot guarantee or be held liable for the performance of sensors or lenses under any particular circumstance(s). Customers are advised to test the products in their specific application environments to ensure suitability for their intended use and are responsible for all sensor and lens selections.

Linmore LED Labs, Inc.
2360 S Orange Ave, Fresno, CA 93725
559 485 6010 | info@linmoreled.com | linmoreled.com

LinmoreLED
ULTRA PERFORMANCE LIGHTING

All specifications are subject to change without notice. Please visit linmoreled.com for latest information. All values are typical or design values and series averages. Actual performance may differ as a result of end-user environments and applications. Consult Linmore LED with specific inquiries. Copyright © 2026, Linmore LED Labs, Inc. All rights reserved. No part of this document may be reproduced in any form without the prior written permission of Linmore LED.

Updated: 2026/03/18