ACE LED
ULTRA VALUE LIGHTING
By Linmore LED

PROJECT NAME		DATE	
CAT. NUMBER			
NOTES			

SPEC SHEET

Ace LED High Bay (AH1)

CONTRACTOR VALUE LED HIGH BAY

5 YEAR PRODUCT WARRANTY

DLC LISTED PREMIUM | TRUSTED NLB WARRANTY | Ready | c UL us LISTED

IP20 | IK06 | 6kV | 0-10V

Projected L70 up to 150,000 hours

Superior Heat Dissipation

Die-cast aluminum housing and heat sink improve thermal transfer, keeping LEDs cool to increase performance and life.

Modern Aesthetics

Clean, modern, minimalistic design that creates an all new look for high bay lighting and transforms a work place.

EZ-Connect™ Receptacle

The simplest and fastest way to add sensors and UltraLink wireless controls at any time in the field. 3-pin Screw-in system, no tools or wiring needed.

KEY FEATURES

- 12,000 to 71,000 Lumens
- Up to 150 LPW
- Up to 50°C (122°F) Ambient
- Unique Aluminum Die-cast Housing
- Aluminum Heatsink
- Frosted Lens
- Flicker-free
- Emergency Battery Backup Available

FEATURES & SPECIFICATIONS

CONSTRUCTION

- **Housing:** Aluminum die-cast.
- **Wireway Cover:** Steel.
- **Heat Sink:** Cast aluminum.
- **Wire Guards:** Field installed wire guards available, upgrades to IK07.
- **EZ-Connect™ Receptacle:** The simplest and fastest way to add sensors and wireless controls at any time on the field. 3-pin Screw-in system, no tools or wiring needed.

SM model

ELECTRICAL

- **Power Input:** 120-277V (50/60Hz) standard, 277-480V (50/60Hz) available as a special order with extended lead time.
- **Power Factor:** Greater than 0.9.
- **Total Harmonic Distortion:** Less than 20%.
- **Flicker:** Less than 0.3% (flicker-free).
- **Surge Protection:** 6kV.
- **Emergency Battery Backup:** EMB produces ~2,200 lumens for a minimum of 90 minutes. EMB has 16 watts output. It can be ordered as an option (factory installed) or as an accessory (field installed).

OPERATION

- **Environment:** Dry/Damp, for interior applications (IP20).
- **Ambient Range Operation:** -30°C up to 50°C (-22°F up to 122°F).

OPTICS

- **CCT:** 5000K standard, 3500K and 4000K available as a special order with extended lead time.
- **CRI:** 80+ standard.
- **Lens:** Frosted.

MOUNTING

- **Suspension Mounting:** Fixture is cable ready (CRM). Includes (2) 3 ft. chains and V-clips (standard). Other suspension mounting options available (see accessories).
- **Pendant Mounting (Stem):** 3/4" conduit stem mounting requires purchase of stem mounting bracket (see accessories).
- **Surface Mounting:** Requires purchase of surface mounting bracket (see accessories).

CONTROLS[1,2]

- **Dimming:** 0-10V standard. Dimming range 100% to Off.
- **Occupancy Sensors:** PIR occupancy sensor, On/Off/Dim. EZ-Connect™ 3-pin Screw-in system for field installation.
- **Networked Lighting Controls:** UltraLink Wireless Controls with Bluetooth® NLC Mesh technology. EZ-Connect™ 3-pin Screw-in system for field installation.

WARRANTY

- **5 Year Warranty:** The fixture is guaranteed for 5 years free of defects in materials and workmanship, including LEDs and driver. "Defective" is considered if ten percent (10%) or more of the LEDs, per product, are non-operating LEDs, or color temperature has shifted more than 500° Kelvin within the warranty period. See terms and conditions at https://linmoreled.com/warranty

LISTINGS & CERTIFICATIONS

- cUL.
- UL 1598.
- RoHS compliant.
- DesignLights™ Consortium Premium.

IP20 IK06 6kV 0-10V RoHS c UL us LISTED TRUSTED N3 WARRANTY DLC LISTED PREMIUM

© 2024 Linmore LED Labs, Inc.

TECHNICAL SPECS

NOMINAL LUMENS	SIZE	LUMEN OUTPUT	WATTS	EFFICACY	PART NUMBER
12K	SM	12,150	85	143	AH10S-A2-12K-SM-50-80-FR-LV-CRM-10CW-S-10V
15K	SM	15,600	110	142	AH10S-A2-15K-SM-50-80-FR-LV-CRM-10CW-S-10V
18K	SM	18,460	130	142	AH10S-A2-18K-SM-50-80-FR-LV-CRM-10CW-S-10V
24K	MD	24,255	165	147	AH10S-A2-24K-MD-50-80-FR-LV-CRM-10CW-S-10V
30K	MD	30,800	220	140	AH10S-A2-30K-MD-50-80-FR-LV-CRM-10CW-S-10V
36K	LG	36,000	240	150	AH10S-A2-36K-LG-50-80-FR-LV-CRM-10CW-S-10V
40K	LG	40,710	295	138	AH10S-A2-40K-LG-50-80-FR-LV-CRM-10CW-S-10V
48K	LG	48,000	320	150	AH10S-A2-48K-LG-50-80-FR-LV-CRM-10CW-S-10V
71K	XL	71,000	500	142	AH10S-A2-71K-XL-50-80-FR-LV-CRM-10CW-S-10V

Typical lumen output (±10%) at 277V (LV), 5000K CCT and 25°C ambient temperature.

ORDERING

SERIES MODEL - COMPLIANCE - LUMENS - SIZE

AH10S-A2-12K-SM
AH10S-A2-15K-SM
AH10S-A2-18K-SM
AH10S-A2-24K-MD
AH10S-A2-30K-MD
AH10S-A2-36K-LG
AH10S-A2-40K-LG
AH10S-A2-48K-LG
AH10S-A2-71K-XL

COLOR TEMP

35[1,3]
3500K

40[1]
4000K

50
5000K

CRI

80
80+ CRI

LENS

FR
Frosted lens

VOLTAGE

LV
120-277V

HV[1]
277-480V

MOUNTING

CRM
Cable-ready (standard)

Includes chain and V-clips for suspended mounting

Other mounting options available, see Accessories

CORD

10CW
10ft. White Cord, 10A, no plug (standard)

WINSTA
12" 18/3 cord whip with WINSTA MIDI 770-104 female connector. For fixtures with corresponding WINSTA male connectors

SENSORS

S
EZ-Connect™ Receptacle with Screw-in system (standard)

Sensors not included, see Controls pages for available products

OPTIONS

EMB
Emergency Battery Backup, 90 min, 2200lm (factory installed)

ULTRA
UltraLink Bluetooth NLC Wireless Fixture Controller (Node), Fixture Integrated, Factory Installed, 12Vdc Input, Silvair Firmware, includes Aerial Antenna.

DIMMING

10V
0-10V

Ordering Example: AH10S-A2-15K-SM-ADJ-80-FR-LV-CRM-10CW-S-10V

© 2024 Linmore LED Labs, Inc.

ACCESSORIES

Must be ordered separately. Packaged separately.

FIXTURE ACCESSORIES

Part Number	Type	Description
CABLEKIT	Suspension Mounting	Gripple Cable Kit. Includes (two) 10 ft. aircraft "Y" cables and snap hooks (one pair).
AH1-STEM-SM/MD	Mounting Bracket	Pendant Mounting Bracket for existing 3/4" Conduit. For SM and MD fixtures.
AH1-STEM-LG/XL	Mounting Bracket	Pendant Mounting Bracket for existing 3/4" Conduit. For LG and XL fixtures.
AH1-SURF-SM/MD	Mounting Bracket	Surface Mounting Bracket for SM and MD fixtures.
AH1-SURF-LG/XL	Mounting Bracket	Surface Mounting Bracket for LG and XL fixtures.
AH1-EMB-16W-LV	Emergency Battery Backup	Emergency Battery Backup, 16W, 90 min, 2200lm, for Low Voltage fixtures. Field installed.
AH1-EMB-20W-HV	Emergency Battery Backup	Emergency Battery Backup, 20W, 90 min, 2200lm, for 12K and 15K High Voltage fixtures. Field installed.
AH1-EMB-40W-HV	Emergency Battery Backup	Emergency Battery Backup, 40W, 90 min, 2200lm, for 18K, 24K, 30K, 36K, 40K, 48K, and 71K High Voltage fixtures. Field installed.
AH1-WG-SM	Wire Guard	Wire Guard for SM fixtures. Compatible with occupancy sensor. Field installed.
AH1-WG-MD	Wire Guard	Wire Guard for MD fixtures. Compatible with occupancy sensor. Field installed.
AH1-WG-LG	Wire Guard	Wire Guard for LG fixtures. Compatible with occupancy sensor. Field installed.
AH1-WG-XL	Wire Guard	Wire Guard for XL fixtures. Compatible with occupancy sensor. Field installed.

© 2024 Linmore LED Labs, Inc.

BASIC CONTROLS[2]

Controls are field installed, must be ordered as a new line item and will ship in a separate box.

BASIC SENSORS

	Part Number	Description
	AH1-SEN-PIR[2]	PIR Occupancy and Daylight Sensor, for EZ-Connect™ Receptacles with 3-Pin Screw-in system, On/Off/Dim, 40' Max Mounting Height. Field installed. Sensor can be re-programmed on the field with remote AH1-SEN-PROG (sold separately).
	AH1-SEN-PROG	Infrared Remote Programmer for AH1-SEN-PIR Occupancy Sensor. Required to change default settings and modes of operation.

DEFAULT SETTINGS

Brightness: 100%, Hold time: 10min, Stand-by dim level: 20%, Stand-by time (to OFF): 30min, Sensitivity: 100%

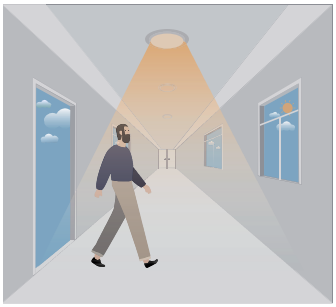

Sensor turns light ON when motion is detected.

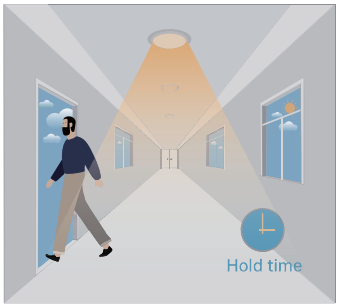

Sensor keeps the light ON for 10 minutes (hold time) after motion leaves.

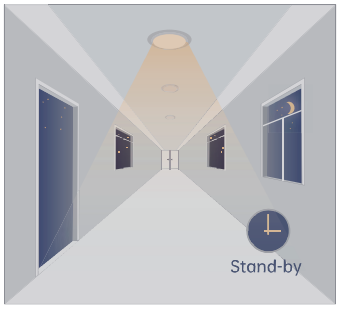

After hold time, sensor dims light to stand-by dimming level for 30 minutes (stand-by time).

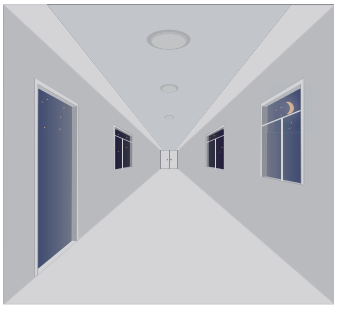

The sensor turns light OFF automatically after stand-by time when there is no motion detected.

INFRARED REMOTE PROGRAMMER

Required to change default settings and modes of operation.

Brightness 70/80/90/100%	**Hold Time** 10s/1min/10min/30min	**Stand-by Dim** 10/20/30/50%
Stand-by Time (to OFF) +∞/1min/30min/60min	**Sensitivity** 20/50/75/100%	**Daylight Threshold** 10/30/50/100lx

AH1-SEN-PROG
Sold separately.

SENSOR COVERAGE

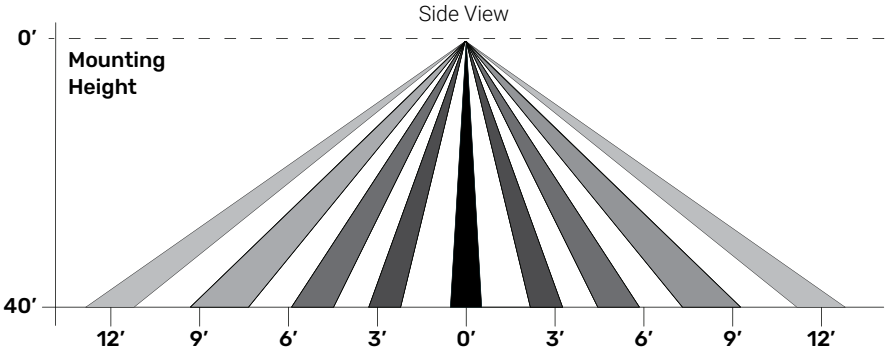

Figure indicate the maximum distance at the highest mounting height with 100% sensitivity.

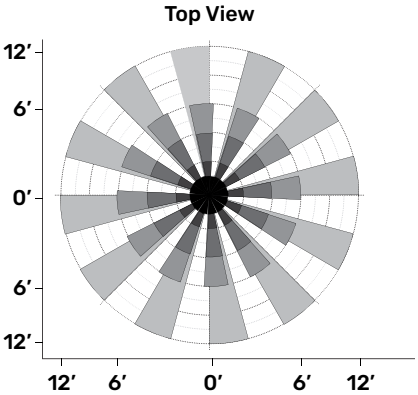

© 2024 Linmore LED Labs, Inc.

ULTRALINK BLUETOOTH CONTROLS

To have the UltraLink controller (node) factory-installed in the fixture, add the ULTRA option to the ordering number (see ordering page). For example: AH10S-A2-15K-SM-ADJ-80-FR-LV-CRM-10CW-S-ULTRA-10V. To have the Plug & Play UltraLink controller with PIR sensor, just order ULTRAPIR40-AH1 (no need to add ULTRA to the ordering number). Plug & Play sensors and accessories must be ordered as a new line item and will ship in a separate box.

ULTRALINK CONTROLLERS / SENSORS

	Part Number	Description
	ULTRAPIR40-AH1	UltraLink Bluetooth NLC Wireless Fixture Controller with PIR Sensor, for EZ-Connect™ Receptacles with 3-Pin Screw-in system, 20' to 40' Mounting Height. Field Installed.

ULTRALINK ACCESSORIES

	Part Number	Description
	ULTRASW	UltraLink Bluetooth NLC Wireless Wall Switch, Self-Powered, Single Rocker, On/Off/Dim.
	ULTRASW-DR	UltraLink Bluetooth NLC Wireless Wall Switch, Self-Powered, Double Rocker, On/Off/Dim/Scenes.
	ULTRASW-AC	UltraLink Bluetooth NLC Wireless Wall Switch, AC-Powered 120-277V, Single Rocker, On/Off/Dim.
	ULTRASW-PIR-AC	UltraLink Bluetooth NLC Wireless Wall Switch with PIR Sensor, AC-Powered 120-277V, Single Rocker, On/Off/Dim.
	ULTRASW-4B-AC	UltraLink Bluetooth NLC Wireless Wall Switch with 4 Buttons, AC-Powered 120-277V, Single Gang, On/Off/Dim/Scenes.
	ULTRARELAY-5A[13]	UltraLink Bluetooth NLC Wireless Receiver / Controller, Bluetooth to 0-10V Converter with 5 Amp Relay, Field Installed, 120-277Vac Input, Silvair Firmware.
	ULTRARELAY-20A[13]	UltraLink Bluetooth NLC Wireless Receiver / Controller, Bluetooth to 0-10V Converter with 20 Amp Relay, Field Installed, 120-277Vac Input, Silvair Firmware.
	ULTRAGATEWAY	UltraLink Bluetooth NLC Wireless Gateway, required for Advanced Features and Time-Based Events. One gateway can control up to 200 fixtures, allowing for energy monitoring, people tracking, and scheduling. Interior installation only.
	ULTRAGATEWAY-EXT	UltraLink Bluetooth NLC Wireless Exterior Rated Gateway Box with High-Gain 2.4Ghz Antenna, includes ULTRAGATEWAY. 120-277V Power Supply required.
	ULTRATIME-BAT	UltraLink Bluetooth Time-Keeping Battery Backup includes an Outdoor Rated Enclosure, a High-Gain Antenna and a Backup Battery. For use to keep time during a power outage and for in-node scheduling.
	ULTRADASH	UltraLink Dashboards for Energy, Occupancy Heat Mapping, and Energy Heat Mapping. Gateway (ULTRAGATEWAY) required, sold separately.

© 2024 Linmore LED Labs, Inc.

DIMENSIONS & DRAWINGS

SM

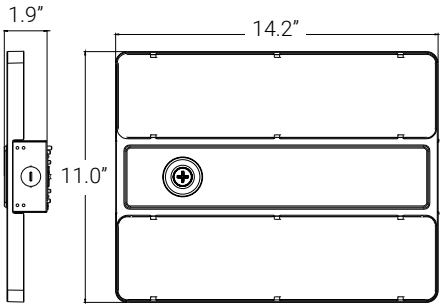

MD

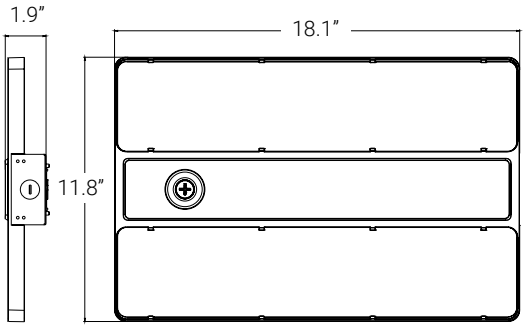

LG

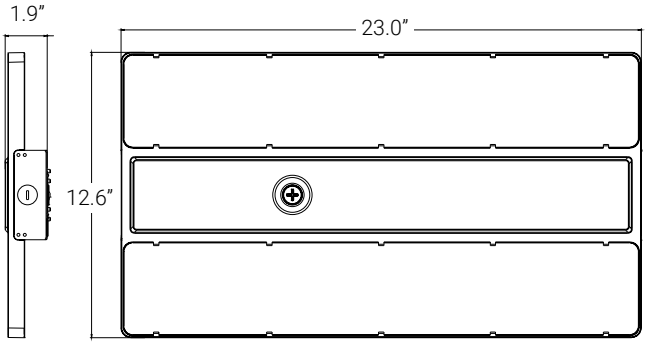

XL

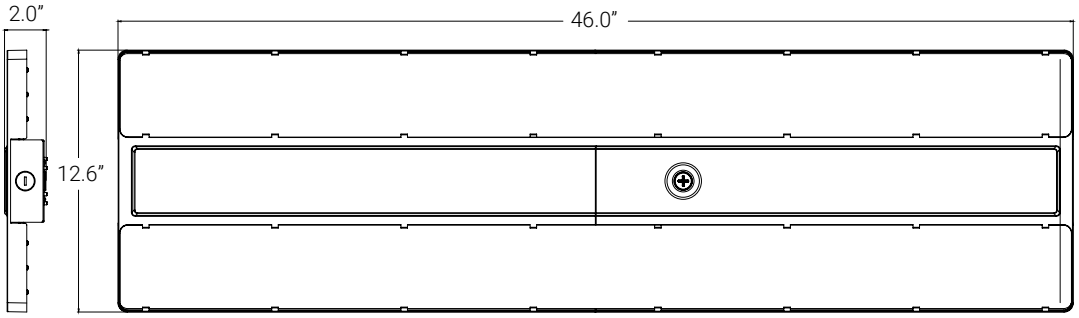

Size	Length	Width	Height	Weight
SM	14.2"	11.0"	1.9"	~4lbs
MD	18.1"	11.8"	1.9"	~6lbs
LG	23.0"	12.6"	1.9"	~8lbs
XL	46.0"	12.6"	2.0"	~16lbs

Dimension tolerances: ± 0.1”. Mounting hardware and sensors add height and weight to the fixture. Weights are approximate and vary by model, if weight is a concern, please contact factory.

© 2024 Linmore LED Labs, Inc.

Fixture with PIR Sensor (AH1-SEN-PIR)

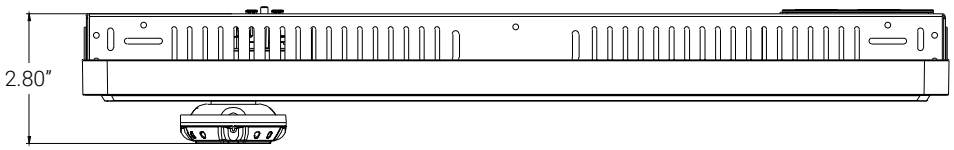

Fixture with Emergency Battery Backup

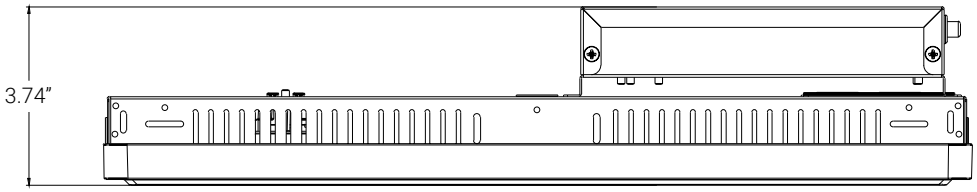

Fixture with Stem Mounting Bracket

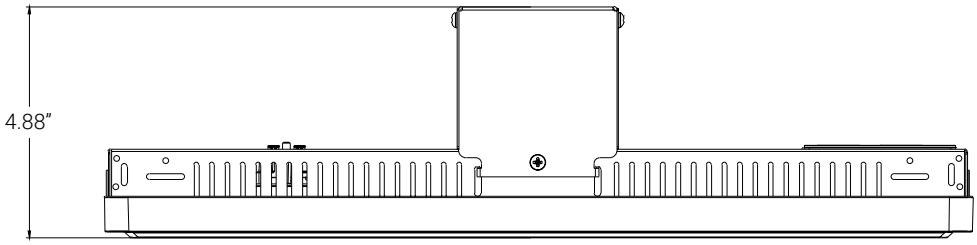

Fixture with Surface Mounting Bracket

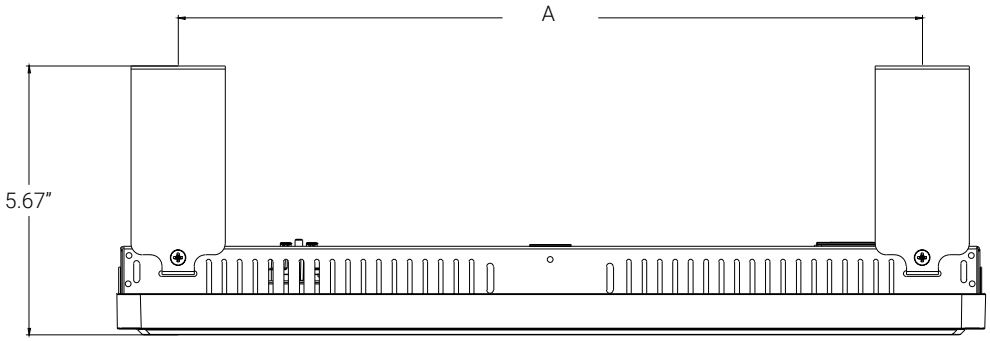

Size	A
SM	11.65"
MD	15.55"
LG	20.39"
XL	39.37"

© 2024 Linmore LED Labs, Inc.

Stem Mounting Bracket

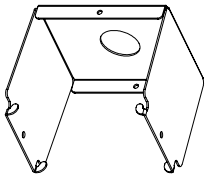

AH1-STEM-SM/MD

AH1-STEM-LG/XL

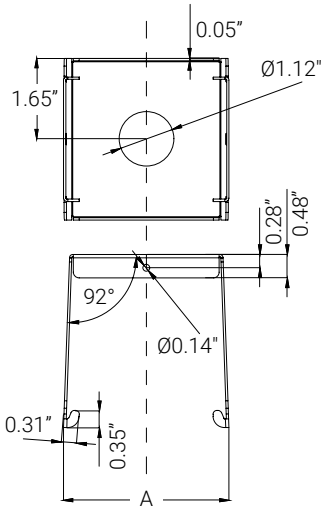

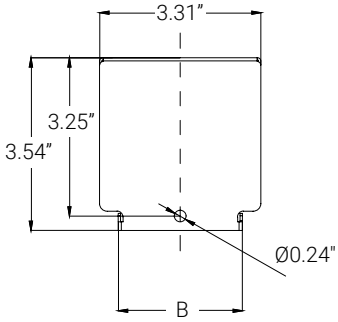

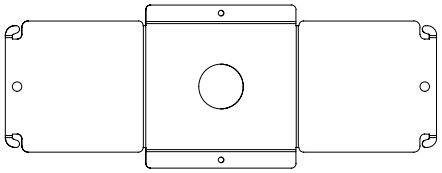

Size	A	B
SM/MD	3.40"	2.55"
LG/XL	4.17"	2.59"

Surface Mounting Bracket

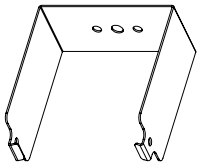

AH1-SURF-SM/MD

AH1-SURF-LG/XL

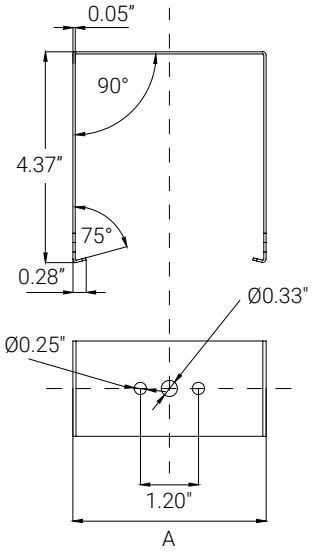

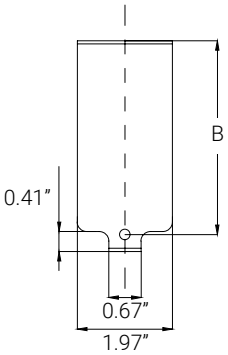

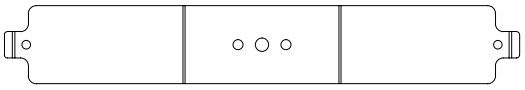

Size	A	B
SM/MD	3.22"	3.97"
LG/XL	4.00"	4.01"

FOOTNOTES

1. Extended lead time. Contact factory.
2. The fixture can not be connected to an additional dimming device when equipped with a PIR occupancy sensor.
3. 3500K CCT models are not DLC listed.

Linmore LED Labs, Inc.

2360 S Orange Ave, Fresno, CA 93725

559 485 6010 | info@linmoreled.com | linmoreled.com

All specifications are subject to change without notice. Please visit linmoreled.com for latest information. All values are typical or design values and series averages. Actual performance may differ as a result of end-user environments and applications. Consult Linmore LED with specific inquiries. Copyright © 2024, Linmore LED Labs, Inc. All rights reserved. No part of this document may be reproduced in any form without the prior written permission of Linmore LED.

Updated: 2024/03/26